E7830X

Rotating Anode X-ray Tube Assembly

- ◆ Compact X-ray tube assembly for CT scanner featuring extremely high cooling performance.
- ◆ Liquid metal lubricated bearings (LM bearings) is applied in the rotation system.
- ◆ All-metal extra-heavy anode disc is constructed with specially processed rhenium-tungsten-faced molybdenum alloy target.
- ◆ The anode heat content is 2840 kJ (4000 kHU) and the maximum anode heat dissipation rate is 10.2 kW.

General Data

IEC Classification (IEC60601+-1:2005+A1:2012) ..... Class Ⅰ ME EQUIPMENT

Electrical:

Circuit:

High Voltage Generator ..... Constant Potential High-voltage Generator

Grounding ..... Center-grounded

Nominal X-ray Tube Voltage ..... 135 kV

Nominal Focal Spot Value:

Large Focus ..... 1.4 × 1.4

Small Focus ..... 0.9 × 0.7

Nominal Anode Input Power (at 4s):

Large Focus ..... 48 kW

Small Focus ..... 30 kW

Nominal CT Anode Input Power:

Large Focus ..... 48 kW

Small Focus ..... 26 kW

Nominal CT Scan Power Index (CTSPI):

Large Focus ..... 44 kW

Small Focus ..... 22 kW

Motor Ratings:

Stator: XS-AY

		1st Start-up	2nd Start-up	Stand-by	Boost-up from Stand-by	Scanning
Driven Frequency	[Hz]	50	120	105	120	120
Input Power	[W]	1500	500	350	950	500
Voltage	[V]	130	168	120	200	168
Current	[A]	15	7.5	6.0	9.0	7.5
Min. Speed Up	[s]	5	15	6	9	-

Notes 1) To be obtained with 3-phase starter ST-7013 or equivalent.
2) These data are indicating standard values.
3) Anode keeps continuous rotation regardless X-ray output.

Anode Speed ..... Minimum 6360 min^{-1}

Stator:

Type ..... Three-phase

Each Winding Impedance ..... 3.8 Ω

Resistance between Housing and Low Voltage Terminals ..... Minimum 2 MΩ (Measured by DC 500 V)

Heat Exchanger Input Power ..... 360 W

Heat Exchanger Input Voltage ..... Single-phase AC 200 V

Heat Exchanger Source Frequency ..... 50/60 Hz

Normal Operating Range of the Housing Temperature ..... 16 ~ 75 °C

Mode of Operation ..... Intermittent

Envelope Current (135kV / 100mA) ..... (Approx) 10 mA

Envelope Voltage (135kV / 100mA) ..... 0 kV

Mechanical:

Dimensions ..... See Dimensional Outline.
- Overall Length ..... 493 mm
- Maximum Diameter ..... 213 mm

Target:
- Anode Angle ..... 7 degrees
- Diameter ..... 140 mm
- Construction ..... Rhenium-tungsten

Permanent Filtration ..... 1.1 mm Al / 75 kV IEC60522:1999

Radiation Protection:
- X-ray Leakage ..... Maximum 0.87 mGy/h
- Leakage Technique Factor ..... 135 kV, 29.6 mA

X-ray Coverage:
- Longitudinal Direction of Tube Axis ..... Anode Side 3.3°
  Cathode Side 21°
- Perpendicular direction of tube axis ..... ± 27°

Weight:
- Tube Housing Unit ..... Approx. 41 kg
- Heat Exchanger ..... Approx. 26 kg

High Voltage Receptacle ..... To Meet Requirements of IEC60526 Corrigendum1:2010

Cooling Method ..... Heat Exchanger

Position During Operation ..... ± 30° with Respect to Tube Axis

Position During Shipping ..... Anode Facing Upward

G Proof in Gantry Rotation ..... Maximum 6.3 × 9.8 m/s^2

Housing Model Number XH-168

Absolute Maximum and Minimum Ratings
(At any time, these values must not be exceeded.)

Maximum X-ray Tube Voltage ..... 135 kV
Between Anode (or Cathode) and Ground ..... 67.5 kV
Minimum X-ray Tube Voltage ..... 80 kV
Maximum X-ray Tube Current:
  Large Focus ..... 400 mA
  Small Focus ..... 300 mA
Maximum Filament Current (25 kHz Maximum):
  Large Focus ..... 5.2 A
  Small Focus ..... 5.2 A
Filament Voltage (25 kHz Maximum):
  Large Focus (At Maximum Filament Current 5.2 A) ..... 9.7 ~ 13.2 V
  Small Focus (At Maximum Filament Current 5.2 A) ..... 10.5 ~ 14.4 V
Continuous Anode Input Power ..... 4.0 kW (5.63 kHU/s)
Thermal Characteristics:
  Maximum Anode Heat Content ..... 2840 kJ (4000 kHU)
  Maximum Anode Heat Dissipation ..... 10.2 kW (14.4 kHU/s)
  Operating Anode Heat Dissipation ..... 5.7 kW (8.03 kHU/s)
  X-ray Tube Assembly Heat Content ..... 3750 kJ (5280 kHU)
  Nominal Continuous Input Power:
    With Heat Exchanger ..... 4.0 kW (5.63 kHU/s)
    Ambient Temperature 45 ℃
    Oil Temperature 80 ℃

Peak Power Input Ratings:
  Do not exceed these value in any anode heat content.

Exposure Time [sec]	Peak Power [kW]	
	Small Focal Spot	Large Focal Spot
4	30	48
10	29	43.5
20	27	40
30	26	37
40	25	36
100	15	20
300	0	0

Environmental Limits

Operating Limits:

Temperature ..... 18 ~ 45 ℃

Humidity ..... 30 ~ 80 %

(no Condensation)

Atmospheric Pressure ..... 70 ~ 106 kPa

Altitude..... 2000 m

Shipping and Storage Limits:

Temperature ..... -20 ~ 75 ℃

Humidity ..... 20 ~ 90 %

(no Condensation)

Atmospheric Pressure ..... 50 ~ 106 kPa

Anode Heating / Cooling Curve

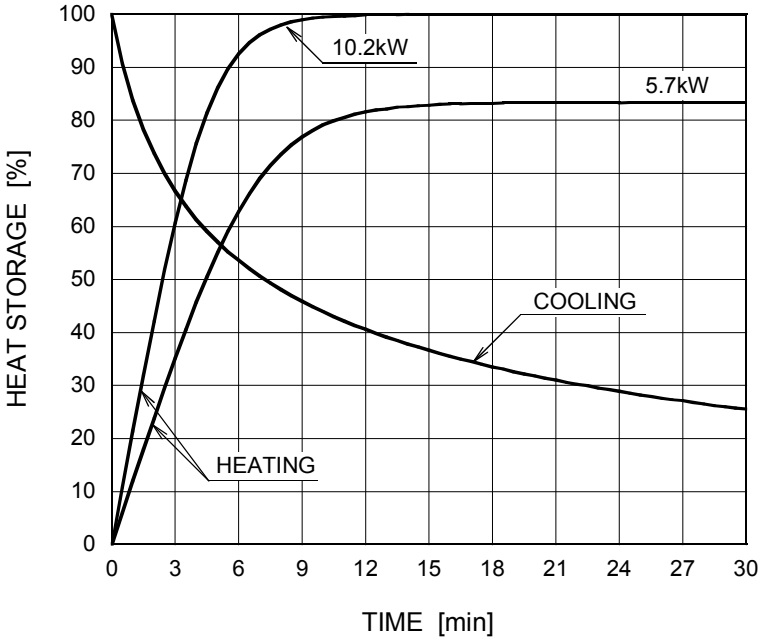

Notes

1. Heat storage of the anode is calculated based on the anode thermal characteristics.
   This determines the X-ray input conditions for subsequent X-ray exposure. For specifying conditions, contact CETD.

2. To avoid the over-load, the OLP (overload protection) program should be used to restrict the X-ray input conditions. The X-ray tube assembly should not be used in systems which do not incorporate the OLP program.
   When absolutely impossible to use a system which incorporate the OLP program, contact CETD for operating procedures.

3. Before you make the OLP program, contact CETD for the detail conditions.

X-ray Tube Assembly Heating / Cooling Curve

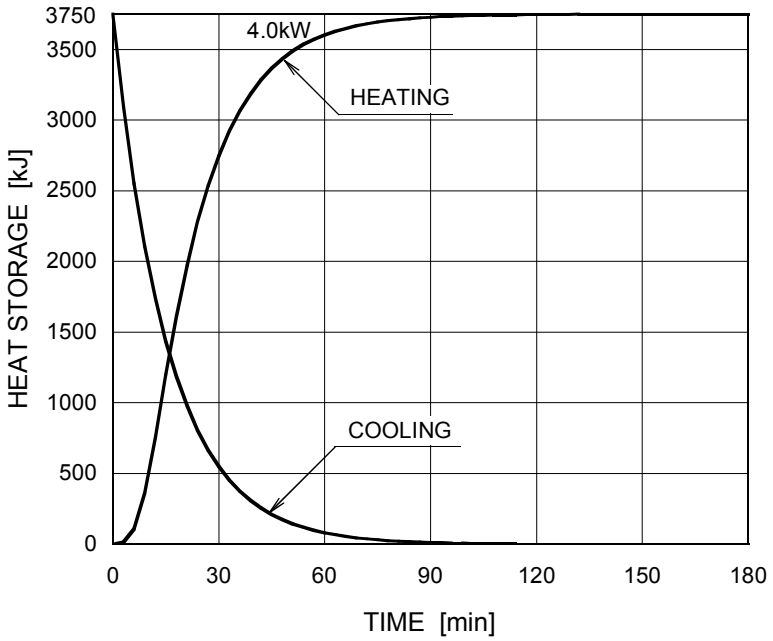

Emission Characteristics

Large Focus ■

Ep: Tube Voltage

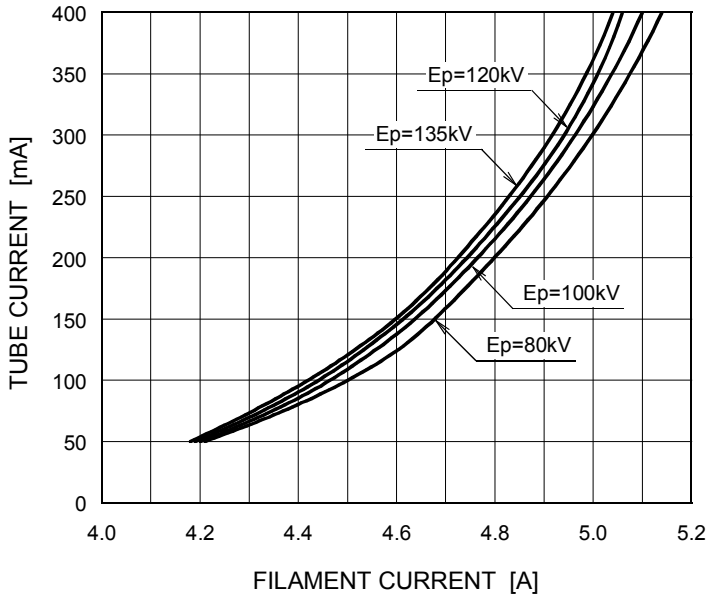

For Reference Only

Small Focus ▣

Ep: Tube Voltage

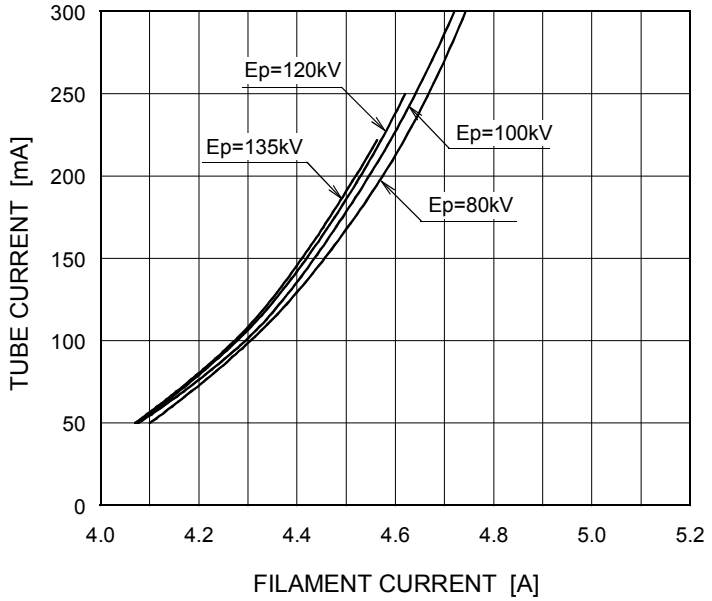

For Reference Only

Filament Characteristics

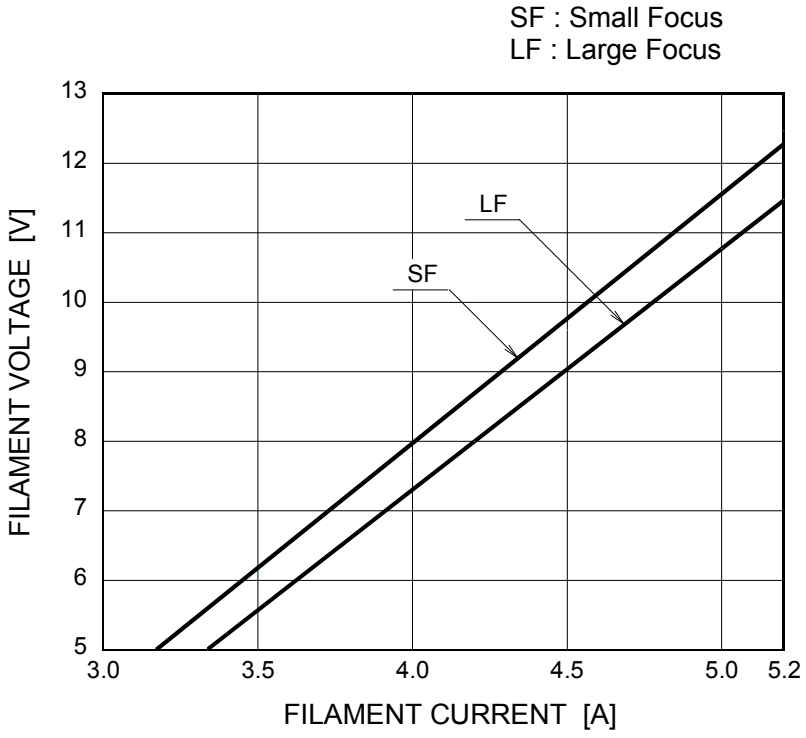

For Reference Only

Dimensional Outline of Tube Housing Unit

Unit: mm

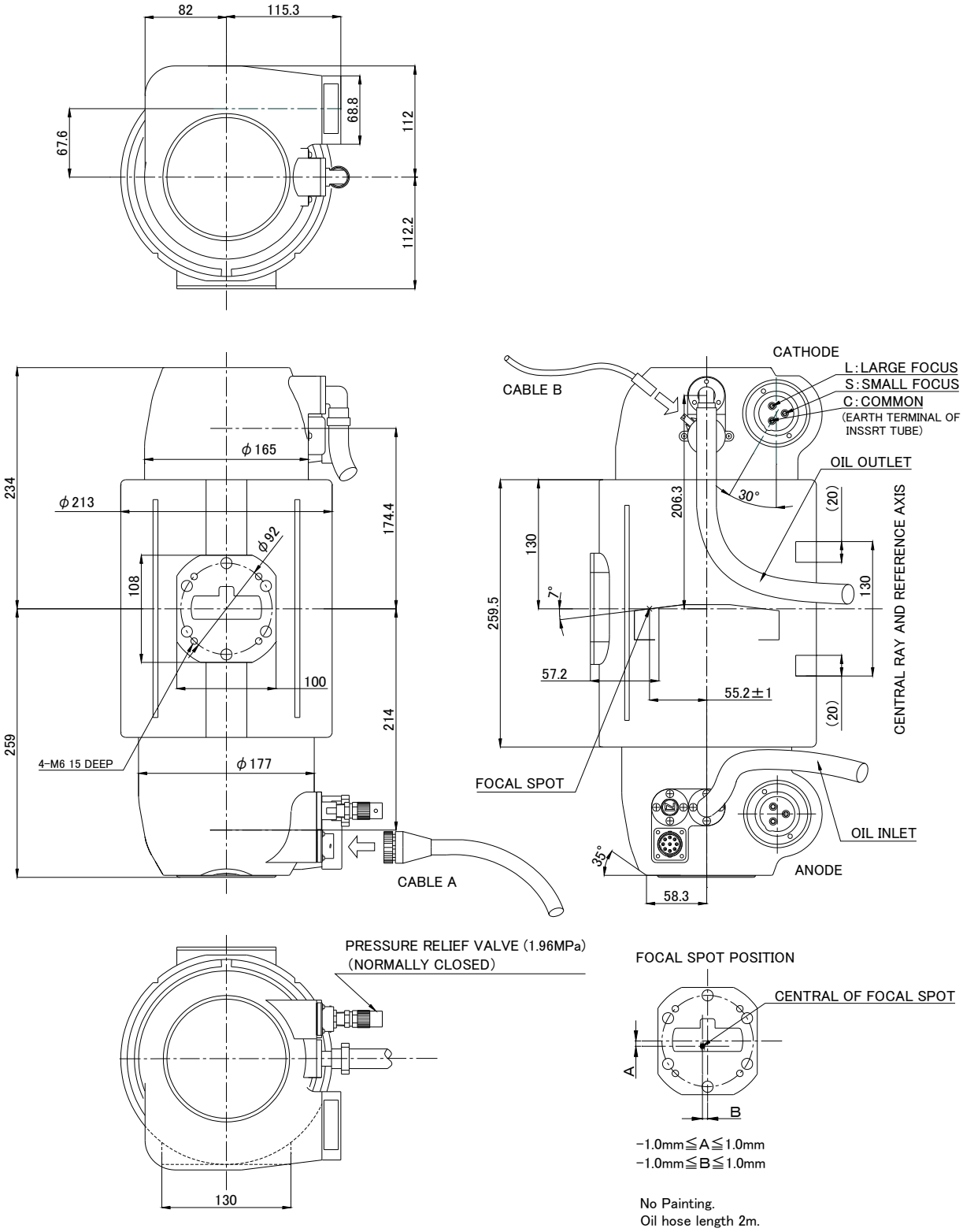

Terminal Connections of Tube Housing Unit

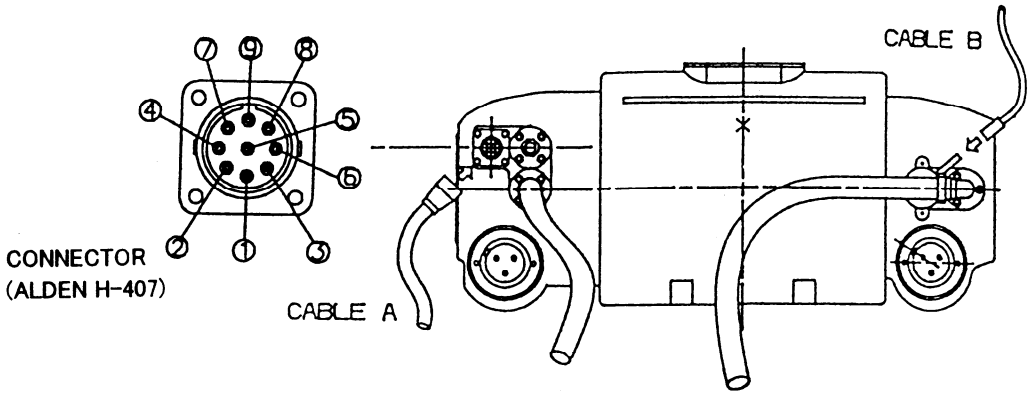

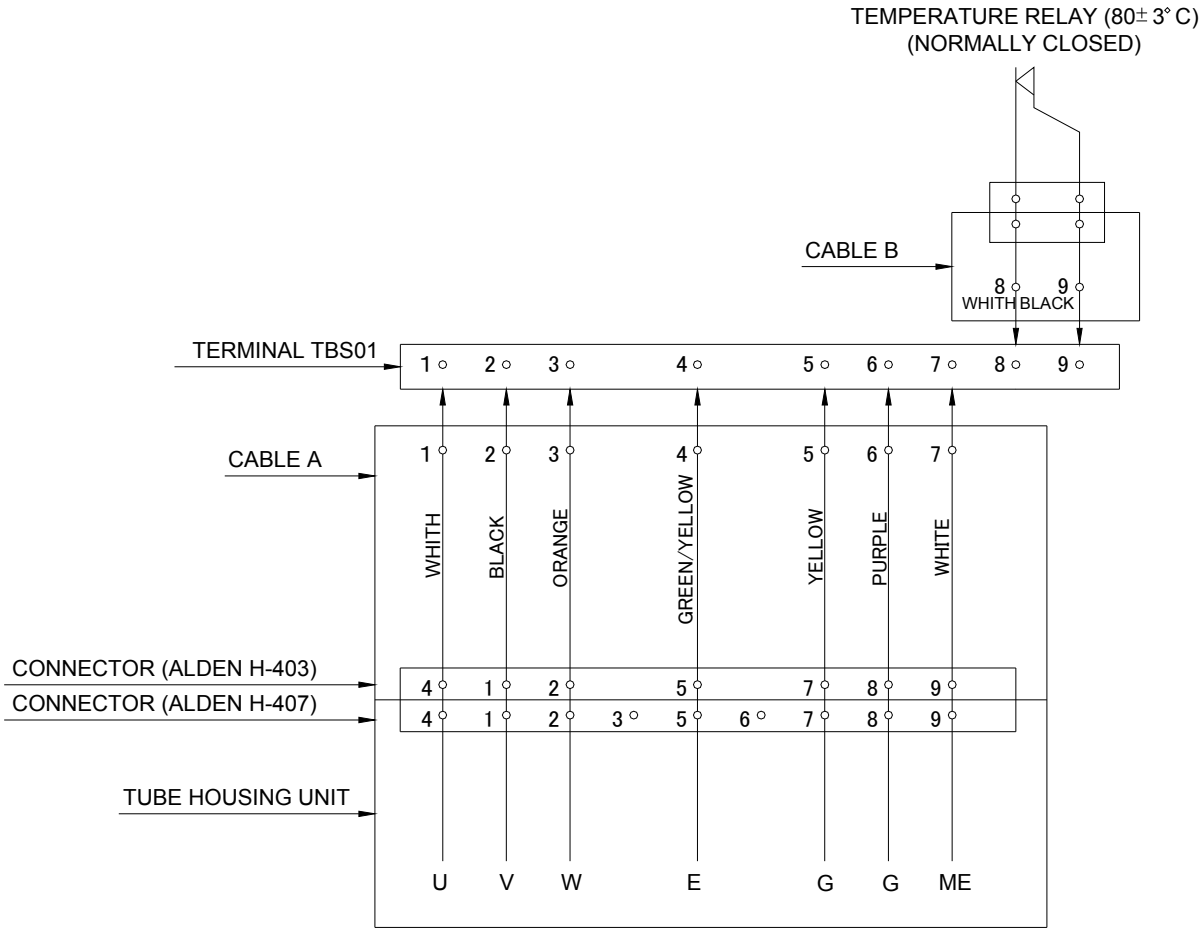

U : U PHASE WINDING OF THE STATOR COIL
V : V PHASE WINDING OF TNE STATOR COIL
W : W PHASE WINDING OF THE STATOR COIL
E : EARTH TERMINAL OF HOUSING ASS.
G : GETTER TERMINAL
ME : EARTH TERMINAL OF INSERT TUBE METAL ENVELOPE

Dimensional Outline of Heat Exchanger

Unit: mm

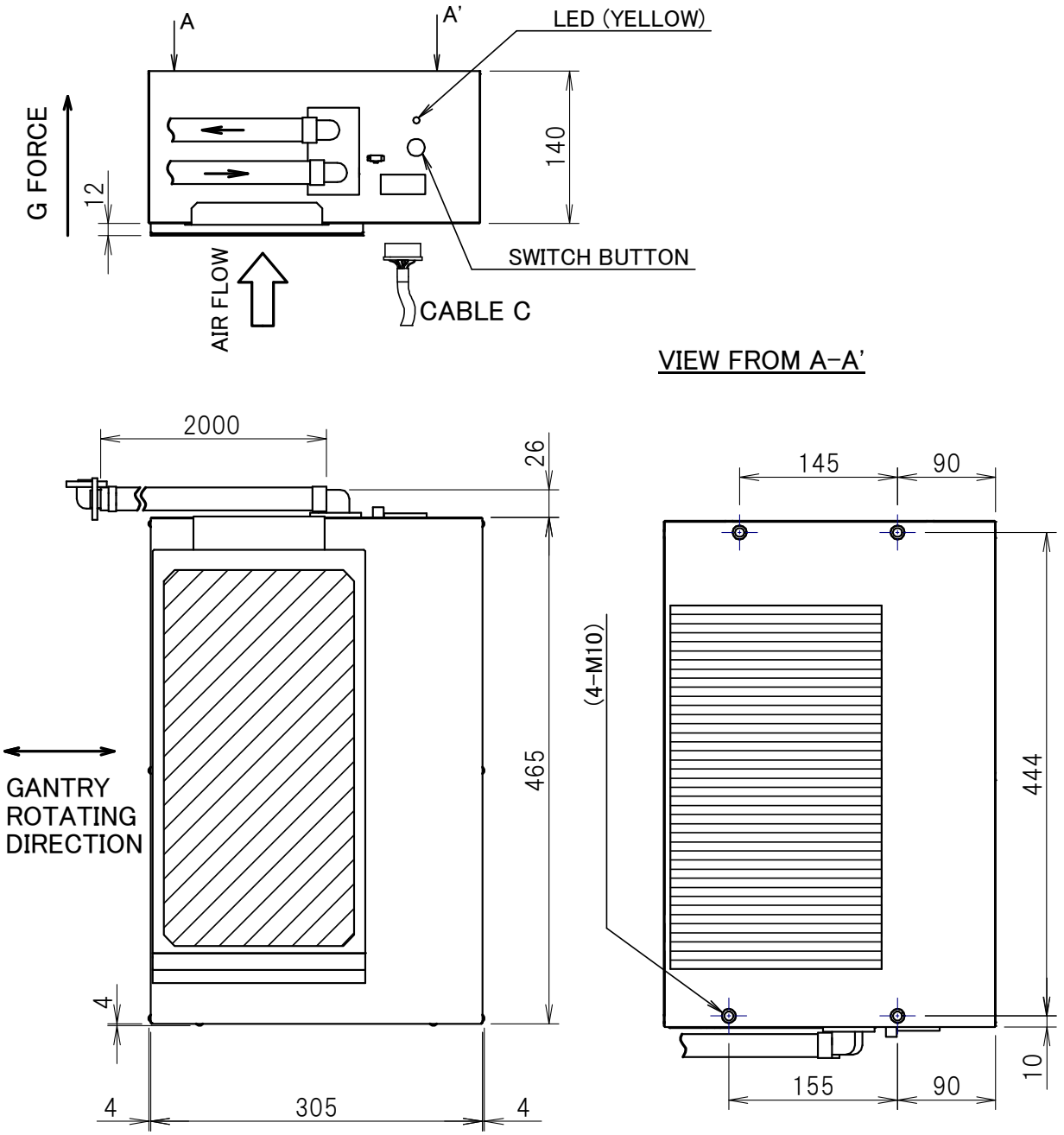

PAINT COLOR:WHITE(Munsell N9.5)

Terminal Connections of Heat Exchanger

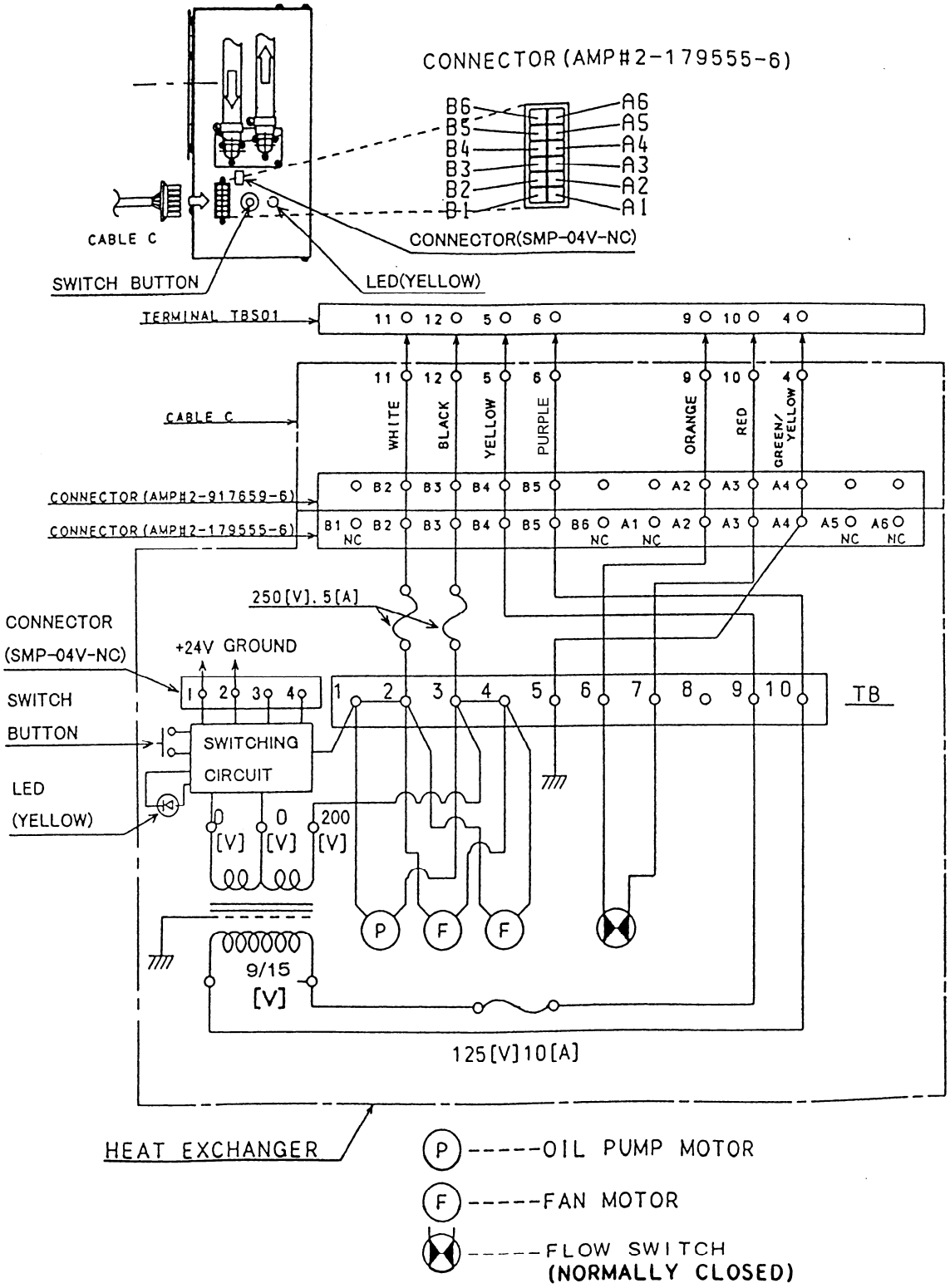

CANON ELECTRON TUBES & DEVICES CO., LTD.
Marketing Engineering Group, Sales Department
1385, Shimoishigami, Otawara-shi, Tochigi 324-8550, Japan
Tel: +81-287-26-6666 Fax: +81-287-26-6060
https://etd.canon

・The head office of Canon Electron Tubes & Devices Co., Ltd. has been certified to meet all the requirements of Environmental Management System ISO14001.
・Canon Electron Tubes & Devices Co., Ltd. has been certified to meet all the requirements of Quality Management Systems ISO9001 and ISO13485.
Product scope is referred to the following URL. https://etd.canon/company/quality.htm.

PE-E7830X 2018-11